A Compact Model For Dielectric Charging in RF MEMS Capacitive Switches

Prasad S. Sumant,[1] Narayana R. Aluru,[1] Andreas C. Cangellaris[2]

[1] Department of Mechanical Science and Engineering, University of Illinois at Urbana-Champaign, 1206 W. Green St., Urbana, IL 61801
[2] Department of Electrical and Computer Engineering, University of Illinois at Urbana-Champaign, 1406 W. Green St., Urbana, IL 61801

Received 5 February 2008; accepted 3 May 2008

ABSTRACT: A unified, macroscopic, one-dimensional model is presented for the quantitative description of the process of dielectric charging in radio frequency micro-electro-mechanical systems (RF MEMS) switches. The fidelity of the model relies on the utilization of experimentally obtained data to assign values to model parameters that capture the nonlinear behavior of the dielectric charging process. The proposed model can be easily cast in the form of a simple simulation program with integrated circuit emphasis (SPICE) circuit. Its compact, physics-based form enables its seamless insertion in nonlinear, SPICE-like, circuit simulators and makes it compatible with system-level MEMS computer-aided analysis and design tools. The model enables the efficient simulation of dielectric charging under different, complex control voltage waveforms. In addition, it provides the means for expedient simulation of the impact of dielectric charging on switch performance degradation. © 2008 Wiley Periodicals, Inc. Int J RF and Microwave CAE 19: 197–203, 2009.

Keywords: RF MEMS; capacitive switches; dielectric charging; SPICE; system level modeling

I. INTRODUCTION

The accumulation of electric charge in the insulating dielectric layer between the two electrodes of a capacitive RF MEMS switch is recognized as one of the most important switch performance degradation mechanism. The resulting dielectric charging can cause the switch to either remain stuck after removal of the actuation voltage or to fail to actuate under the application of pull-in voltage. Because of its importance, the mechanism of dielectric charging has been the topic of significant research investigation. The following serves as a selective review of the most recent literature, which is by no means exhaustive. A more extensive overview is provided by the comprehensive list of references that are included in the works noted below.

First experimental characterization of dielectric charging in capacitive RF MEMS switches was presented in [1]. It was qualitatively shown that switch lifetime depends exponentially on the applied voltage. This was attributed to Frenkel-Poole conduction [2], which depends exponentially on voltage. In Ref. [3] it was reported that dielectric charging was caused by charge injection. Through the development of a systematic and accurate procedure for the experimental investigation of charging and discharging current transients, a charging model was developed and used in [4] for the quantitative description of dielectric charging. In Ref. [5] it was demonstrated that the capacitive switch lifetime is a function of the applied

Correspondence to: P. S. Sumant; e-mail: psumant2@uiuc.edu
DOI 10.1002/mmce.20340
Published online 20 August 2008 in Wiley InterScience (www.interscience.wiley.com).

voltage and the contact quality between the bridge and the dielectric. An experimentally fitted analytical model in [6] and a stretched exponential relaxation model in Ref. [7] are two of several additional notable proposals for the quantitative modeling of dielectric charging. A SPICE circuit model was proposed in Ref. [8] to provide for efficient numerical simulation of dielectric charging. One useful application of such a model is in the investigation of complex bipolar control voltage waveforms for reducing the effect of dielectric charging [9].

On-going efforts in the pursuit of the quantitative understanding of dielectric charging and its dependence on material properties, operating conditions, and device geometry are complemented by research in the advancement of the sophistication of computer models for dielectric charging. In addition to representing accurately the governing physics, these models must be compact enough to enable computer-aided device optimization. This in turn requires the seamless interfacing of such a model with system-level simulators for MEMS devices, to couple the effect of dielectric charging with electromechanical performance of the switch.

In this spirit, a one-dimensional model was introduced in [10] to facilitate a macroscopic description of dielectric charging that allowed for incorporation of several physical factors known to impact dielectric charging. It is the objective of this article to improve further on the model in [10], toward the development and demonstration of a compact, one-dimensional model for the quantitative description of dielectric charging with the following attributes:

- It utilizes experimentally obtained data to assign specific values to the parameters used in the governing equations for the model;
- It enables the calculation of temporal evolution of charge under any complex waveform;
- It enables accurate and efficient simulation for lifetime assessment;
- It lends itself to convenient insertion into existing MEMS system-level, computer aided analysis tools, thus providing for predictive analysis of the impact of dielectric charging during switch operation.

The article is organized as follows. We begin with the discussion of the use of an electro-quasi-static model for the physics involved in the dielectric charging during the operation of the RF MEMS capacitive switch. Next, we show how switch physical attributes as well as data obtained from experiment are combined and used to decide the values of the parameters in the electro-quasi-static model. Once these values have been obtained, the use of the model for the quantitative investigation of charge accumulation for different stress voltages and waveforms is demonstrated. This is followed by the development of a SPICE equivalent circuit description of the proposed model.

II. MACROSCOPIC MODEL OF DIELECTRIC CHARGING

A generic illustration of the cross-sectional geometry of a typical RF MEMS capacitive switch can be found in Ref. [11]. Illustrated in Figure 1 is the one-dimensional (1D) compact model used for system level modeling of such MEMS switches. It highlights the kind of model that will be needed for dielectric charging. This model represents an ideal switch. However, processing conditions result in inhomogeneities and imperfections in both the electrodes and the insulating dielectric. For example, because of surface roughness, the interface between the metal and the dielectric is not perfectly planar (Fig. 2a). Macroscopically, this can be viewed as a spatial variation in the electrical properties of the dielectric, namely, its

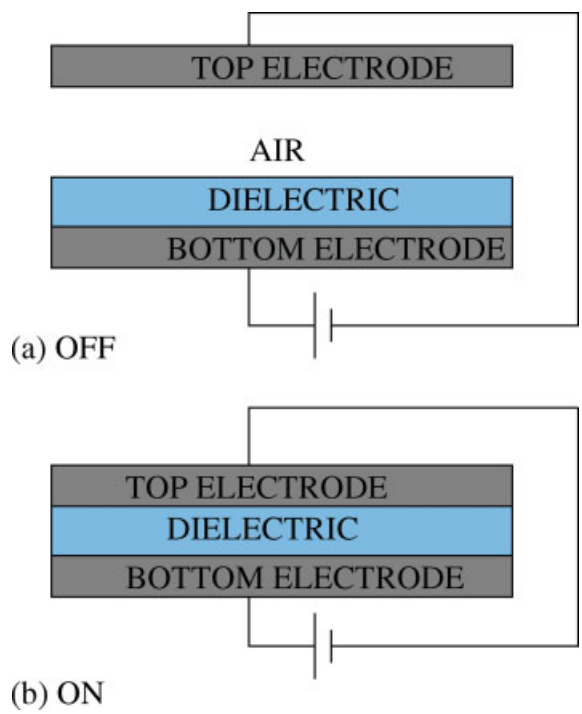

Figure 1. 1D model: "Off" and "on" states of an ideal capacitive switch. [Color figure can be viewed in the online issue, which is available at www.interscience.wiley.com.]

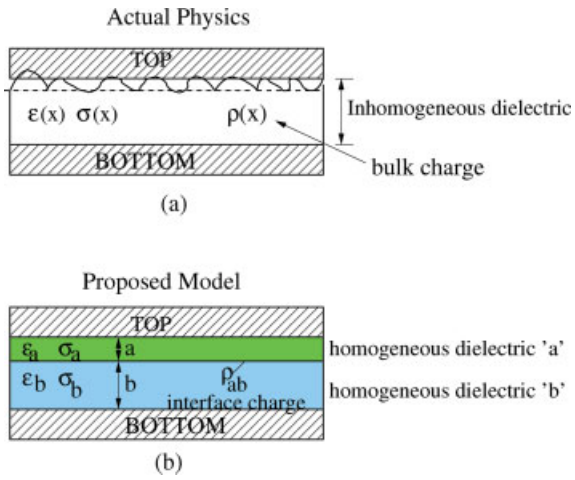

Figure 2. On state: Macroscopic model of dielectric charging. [Color figure can be viewed in the online issue, which is available at www.interscience.wiley.com.]

electric permittivity and its conductivity. As is well known, surfaces of discontinuity of the material electrical parameters become regions of accumulation of charge. In a similar manner, defects within the volume of the dielectric material itself and, more generally, the presence of variations in its macroscopic electric properties, lead to accumulation of charge throughout the bulk of the dielectric (Fig. 2a). For modeling simplicity and in the context of 1D modeling, we will use a single sheet of charge, located at a certain distance "b" from the bottom electrode (Fig. 2b), to account for this bulk charge in the model. Based on the discussion above, for charge to accumulate at this plane the electrical properties of the dielectric must exhibit a discontinuity across the plane (Fig. 2b). The physics of charge accumulation can then be quantified through the mathematical analysis of the resulting two-layer Maxwell capacitor configuration [10].

Let $V(t)$ be the impressed voltage between the two electrodes (see Fig. 3). The 1D nature of the proposed model and its piece-wise homogeneous material properties imply that the electric field is uniform in each layer. Let ρ_{ab} represent the surface charge density at the interface. It is, then,

$$\rho_{ab} = (\varepsilon_a E_a - \varepsilon_b E_b) \tag{1}$$

where ε_i, $i = a,b$, are the electric permittivities of the two layers. Application of charge conservation at the dielectric interfaces yields

$$(\sigma_a E_a - \sigma_b E_b) + \frac{\partial(\varepsilon_a E_a - \varepsilon_b E_b)}{\partial t} = 0 \tag{2}$$

where σ_i, $i = a,b$ are the conductivities of the two layers. Finally, the equation

$$aE_a + bE_b = V(t) \tag{3}$$

closes the system for the determination of the temporal evolution of $E_a(t)$, $E_b(t)$.

More specifically, given $V(t)$ the system of (1)–(3) can be solved for the calculation of the electric fields in the three layers, which, in turn, through (1), (2), can be used to obtain the temporal variation of the charge accumulation. The above equations can be simplified to arrive at a charging equation of the form,

$$\frac{\partial \rho_{ab}}{\partial t} + B\rho_{ab} = A \tag{4}$$

where A and B are given by,

$$A = \frac{\sigma_b \varepsilon_a - \sigma_a \varepsilon_b}{b\varepsilon_a + a\varepsilon_b} V \qquad B = \frac{b\sigma_a + a\sigma_b}{b\varepsilon_a + a\varepsilon_b} \tag{5}$$

Finally, using well-known results, the shift in actuation voltage because of charge accumulation is given by,

$$\Delta V = \frac{b\rho_{ab}}{\varepsilon_b} \tag{6}$$

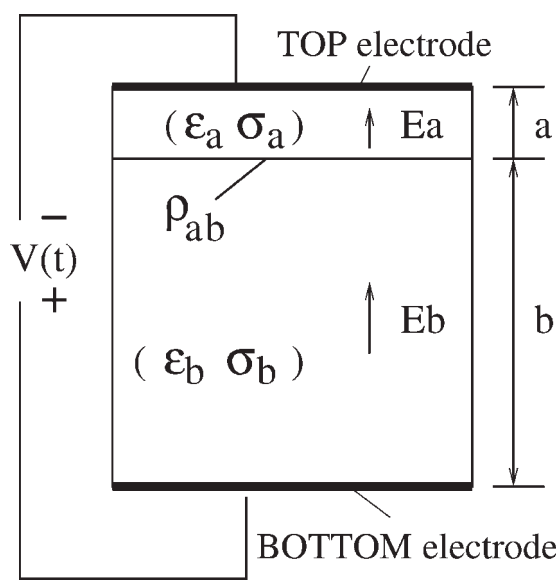

Figure 3. Proposed two layer Maxwell capacitor.

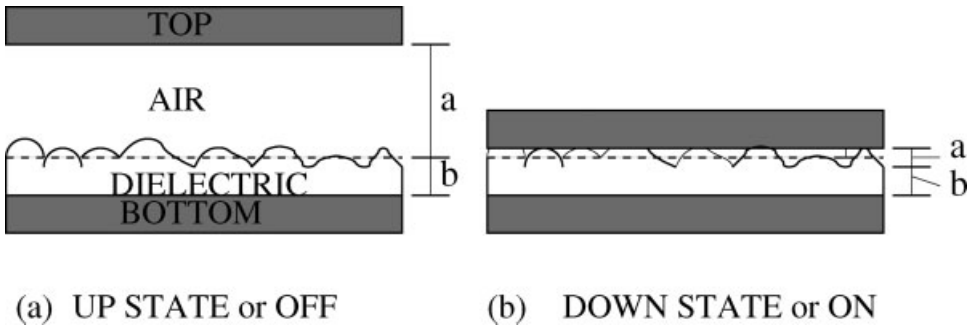

Figure 4. "Off" and "on" states: Definition of model parameters.

III. DEFINITION OF MODEL PARAMETERS

Next, we describe the process we adopt for defining the model parameters. For the purpose of illustration, we consider the switch used in [9]. This process can be repeated for any switch where such data are available. For definition of model parameters, we rely on both the switch physical attributes and data obtained from the experimental characterization of the dielectric. We consider two distinct states of the switch, "on" (or "charging," or "down") state, and "off" (or "discharging," or "up") state. The two layers "a" and "b" are shown in these two states (see Fig. 4). For layer "b," we take its thickness to be the thickness of the dielectric and its permittivity ε_b to be the permittivity of silicon dioxide which is 5.5. For layer "a," in the "up" state, thickness is the same as the air gap whereas permittivity is taken to be the permittivity of air. Its conductivity is taken to be zero. In the "down" state, its permittivity is taken to be

$$\varepsilon_a = \frac{3\varepsilon_b}{\varepsilon_b + 2}\varepsilon_0 \tag{7}$$

This expression is motivated by the well-known effect of the induced polarization in a dielectric sphere in the presence of an external electric field [12]. In this case, it is the hemispherical asperities representing the roughness at the metal/insulator interface that are taken into account in a macroscopic manner through the assignment in eq. (7) for the permittivity of layer "a." Its thickness is taken to be 0.05 μm, a value dictated by information about the roughness of metal/insulator interface (Table I). The only parameters that now remain to be defined are the conductivities of layer "b" in the two states. For this we make use of data obtained from experimental characterization of the dielectric. More specifically, useful experimental inputs for the definition of these parameters include transient current measurements, transient capacitance measurements, and measured actuation voltage shifts.

For the purposes of this article, we will make use of measured data of dielectric charge density accumulation, $Q(t)$, obtained from transient current measurements [9]. A plot of $Q(t)$ for different voltages reported in [9] is shown in Figure 5 (blue line with "o"). It is important to note that measured actuation shifts in voltage can also be used as they can be readily transformed into this graph through eq. (6).

The following strategy is used for obtaining the conductivities of the two layers.

- Pick a curve for the accumulated charge density $Q(t)$ for a particular voltage.
- Calculate model parameters A and B [eq. (4)] through a nonlinear least squares algorithm like Levenberg-Marquardt [13]. A and B, in turn, yield the conductivities through eqs. (5) and (6) as all other model parameters are already defined.
- Note that A is related to the steady state value whereas B is related to the time constant of the charge density accumulation. It has been experimentally observed that time constant does not vary with the applied voltage [4].
- Once B is found for one voltage, for other voltages only A needs to be determined. Thus,

TABLE I. Model Parameters

	Off or Up State	On or Down State
a	2.2 μm	0.05 μm
b	0.3 μm	0.3 μm
ε_a	ε_0	2.2 ε_0
ε_b	5.5 ε_0	5.5 ε_0
σ_a	0	Experimentally defined
σ_b	Experimentally defined	Experimentally defined

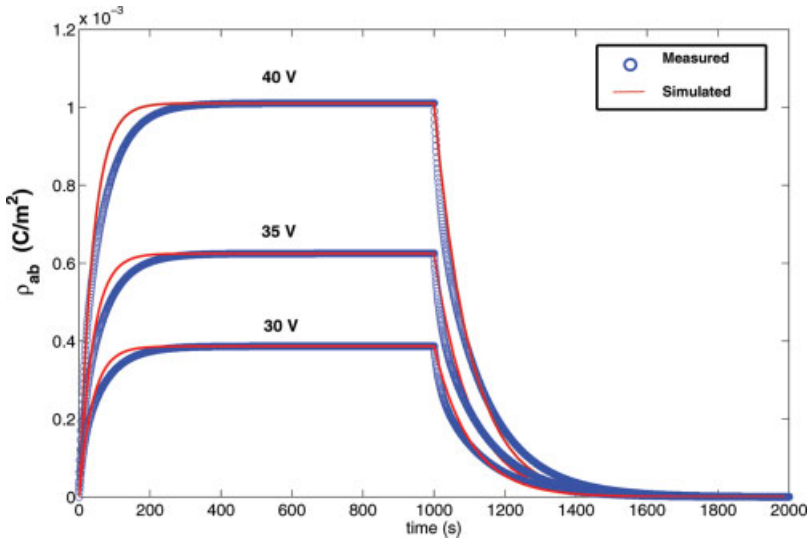

Figure 5. Comparison of model parameters with experimentally obtained charge density. [Color figure can be viewed in the online issue, which is available at www.interscience.wiley.com.]

only steady-state values of charge/actuation voltage shift are needed for determining A.

The aforementioned methodology was used to define the conductivities in the proposed model using the data in [9]. The model was then used to calculate charge accumulation and was compared with the experimentally obtained results. Figure 5 depicts the comparison. Very good agreement is observed. For the simulated curves in Figure 5, the values of A for 40 V, 35 V, and 30 V obtained through the aforementioned process were 2.627e-5, 1.624e-5, and 1.005e-5 (A/m^2), respectively and the value of B was 0.026 s^{-1}. Plotted in Figure 6 is the conductivity of layer "b," illustrating its nonlinear dependence on the voltage. With all parameters defined, the model lends itself to the calculation of dielectric charge accumulation for any control voltage waveform. This is the topic of the next section.

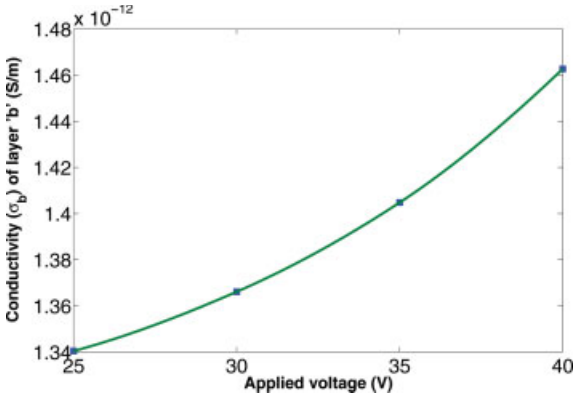

Figure 6. Voltage dependent conductivity of layer b. [Color figure can be viewed in the online issue, which is available at www.interscience.wiley.com.]

IV. SIMULATION UNDER DIFFERENT WAVEFORMS

Bipolar control voltage waveforms have been proposed as a means to limit dielectric charging [9]. The proposed model provides for a computationally efficient way for evaluating dielectric charging under different control voltage waveforms and its impact on actuation voltage. Following [9], the change in actuation voltage versus time was computed using our model for three waveforms. The attributes of the three control waveforms, W_i, $i = 1,2,3$, are summarized in Table II. Each column entry represents the value of the voltage applied for that % of the time period T. The predictions from our model (solid lines in the graph) are in excellent agreement with the experimental values reported in [9] (see Fig. 7). Waveform 3 is seen to minimize the effect of dielectric charging.

V. SPICE EQUIVALENT CIRCUIT MODEL

The proposed model can be cast in the form of a SPICE circuit consisting of a capacitor, a variable

TABLE II. Bipolar Control Voltage Waveforms

t/T (%)	W_1 (V)	W_2 (V)	W_3 (V)
10	35	30	35
30	0	0	0
40	−35	−30	−30
20	0	0	0

resistor, and a voltage controlled current source (Fig. 8). The capacitance value is taken to be

$$C_0 = \frac{\varepsilon_b}{b} \tag{8}$$

so that the voltage at node 1 directly measures the shift in pull in voltage. The value of the resistor is taken to be BC_0. It has two discrete values depending on if it is "on" or "off." Note that B is independent of the value of the voltage. This greatly simplifies the analysis. The voltage controlled current source is given by,

$$\text{VCCS} = \frac{\sigma_b \varepsilon_a - \sigma_a \varepsilon_b}{b\varepsilon_a + a\varepsilon_b} V(2) \tag{9}$$

This model is very efficient to simulate using a nonlinear, SPICE-like, circuit simulator. For example, the simulation for the prediction of dielectric charge accumulation after four million cycles requires 600 s of computation time on a PC with 1 GB RAM and 1.76 GHz Intel Pentium M processor.

VI. CONCLUSIONS

To conclude, we have presented a 1D compact model for the macroscopic, quantitative description of the process of dielectric charging in RF MEMS capacitive switches. The proposed model relies on experimentally obtained data for the definition of its parameters, thus allowing for nonlinearities in material electrical properties to be incorporated in its definition. The compactness of the model lends itself to the efficient and accurate simulation of dielectric charging under complex control voltage waveforms. It is easily cast in the form of a SPICE circuit, which can be used to expedite the computer-aided assessment of the impact of dielectric charging on the performance of the switches. In addition, because of its physics-based description, the proposed model should be found useful for incorporation in the electromechanical models for MEMS switches used in system-level MEMS simulation tools.

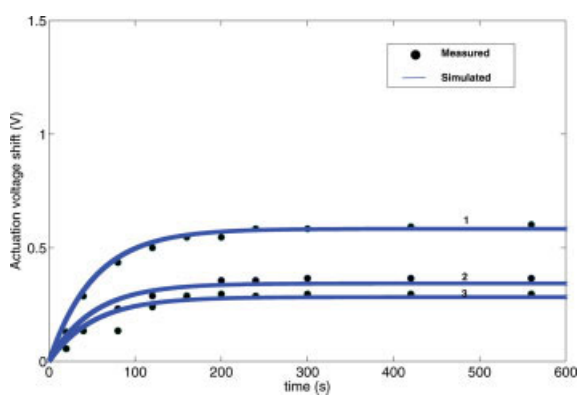

Figure 7. Bipolar waveforms: comparison of model prediction with results from experiment. [Color figure can be viewed in the online issue, which is available at www.interscience.wiley.com.]

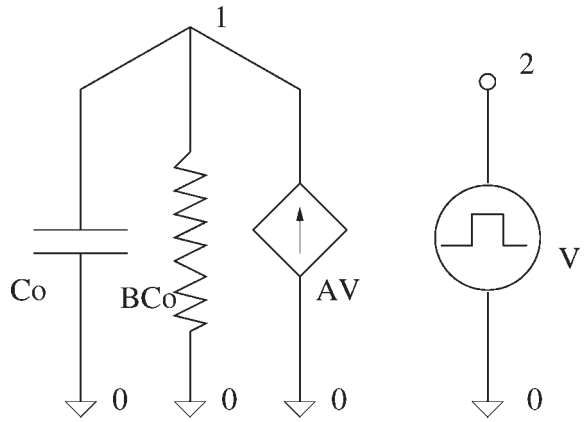

Figure 8. SPICE equivalent circuit.

ACKNOWLEDGMENTS

This research was supported by the U.S.A. Defense Advance Research Programs Agency (DARPA), under the N/MEMS Science and Technology Fundamentals Program, through Grant HR0011-06-1-0046.

REFERENCES

1. C. Goldsmith, J. Ehmke, A. Malczewski, B. Pillans, S. Eshelman, Z. Yao, J. Brank, and M. Eberly, Lifetime characterization of capacitive RF MEMS switches, IEEE MTT-S Int Microwave Symp Dig 1 (2001), 227–230.
2. S.M. Sze, Physics of semiconductor devices, Wiley, New York, 1969.
3. X. Yuan, S.V. Cherepko, J.C.M. Hwang, C.L. Goldsmith, C. Nordquist, and C. Dyck, Initial observation and analysis of dielectric charging effects on RF MEMS capacitive switches, IEEE MTT-S Int Microwave Symp Dig 3 (2004), 1943–1946.

4. X. Yuan, J.C.M. Hwang, D. Forehand, and C.L. Goldsmith, Modeling and characterization of dielectric charging effects in RF MEMS capacitive switches, IEEE MTT-S Int Microwave Symp Dig (2005), 753–756.
5. S. Melle, D.D. Conto, D. Dubuc, K. Grenier, O. Vendier, J.-L. Muraro, J.-L. Cazaux, and R. Plana, Reliability modeling of capacitive RF MEMS, IEEE Trans Microwave Theory Tech 53 (2005), 3482–3488.
6. W.M.v. Spengen, R. Peurs, R. Mertens, and I.D. Wolf, A comprehensive model to predict the charging and reliability of capacitive RF MRMS switches, J Micromech Microeng 14 (2004), 514–521.
7. G.J. Papaionnou, M. Exarchos, V. Theonas, G. Wang, and J. Papapolymerou, On the dielectric polarization effects in capacitive RF MEMS switches, IEEE MTT-S Int Microwave Symp Dig (2005), 761–764.
8. X. Yuan, Z. Peng, J.C.M. Hwang, D. Forehand, and C.L. Goldsmith, A transient SPICE model for dielectric-charging effects in RF MEMS capacitive switches, IEEE Trans Electron Dev 53 (2006), 2640–2648.
9. Z. Peng, X. Yuan, J.C.M. Hwang, D. Forehand, and C.L. Goldsmith, Dielectric charging of RF MEMS capacitive switches under bipolar control voltage waveforms, IEEE MTT-S Int Microwave Symp Dig (2007), 1817–1820.
10. P.S. Sumant, A.C. Cangellaris, and N.R. Aluru, Modeling of dielectric charging in RF MEMS capacitive switches, Microwave Opt Technol Lett 49 (2007), 3188–3192.
11. Z. Peng, X. Yuan, J.C.M. Hwang, D. Forehand, and C.L. Goldsmith, Top vs. bottom charging of the dielectric in RF MEMS capacitive switches, Proceedings of the Asia Pacific Microwave Conference, 2006. Japan, 12–15 Dec 2006.
12. J.D. Jackson, Classical electrodynamics, Wiley, New York, 1999.
13. K. Madsen, H.B. Nielson, and O. Tingleff, Methods for non linear least squares problems (2004), IMM Lecture note [Online], Available at: http://www2.imm.dtu.dk/pubdb/views/edoc_download.php/3215/pdf/imm3215.pdf. [accessed 5th May, 2008].

BIOGRAPHIES

Prasad S. Sumant received his B.Tech. (Bachelor of Technology) in Mechanical Engineering and M.Tech. (Master of Technology) in Computer Aided Design and Automation (CADA) from the Indian Institute of Technology Bombay (IITB), India, in 2004. He joined the Department of Mechanical Science and Engineering at the University of Illinois at Urbana-Champaign (UIUC) in Fall 2005 and is currently working toward his Ph.D. degree. His research interests include computational methods for design and analysis of MEMS, computational electromagnetics, and numerical techniques in engineering. He is a student member of IEEE. He is a recipient of the Outstanding Scholar Fellowship (2005-Present) from the Department of Mechanical Science and Engineering at UIUC. He was elected to the honor society of Phi Kappa Phi in 2007.

N. R. Aluru is currently a Professor in the Department of Mechanical Science and Engineering at University of Illinois at Urbana-Champaign. He is also affiliated with the Beckman Institute for Advanced Science and Technology, the Department of Electrical and Computer Engineering, and the Bioengineering Department at UIUC. He received the B.E. degree with honors and distinction from the Birla Institute of Technology and Science (BITS), Pilani, India, in 1989, the M.S. degree from Rensselaer Polytechnic Institute, Troy, NY, in 1991, and the Ph.D. degree from Stanford University, Stanford, CA, in 1995. He was a Postdoctoral Associate at the Massachusetts Institute of Technology (MIT), Cambridge, from 1995 to 1997. In 1998, he joined the University of Illinois at Urbana-Champaign (UIUC) as an Assistant Professor. He received the NSF CAREER award in 1999, the NCSA faculty fellowship in 1999 and 2006, the 2001 CMES Distinguished Young Author Award, the Xerox Award for Faculty Research in 2002, the ASME Gustus L. Larson Memorial Award in 2006, the USACM Gallagher Young Investigator Award in 2007 and was named a Willett Faculty Scholar by the College of Engineering at UIUC for the period 2002-2008. He is a Subject Editor of the IEEE/ASME Journal of Microelectromechanical Systems, served as the Associate Editor of IEEE Transactions in Circuits and Systems II for 2004–2005, and currently serves on the Editorial Board of a number of other journals.

Andreas C. Cangellaris is the M. E. Van Valkenburg Professor in Electrical and Computer Engineering, at the University of Illinois at Urbana-Champaign. His expertise and research interests are in electromagnetism and its applications to the advancement of modeling methodologies and CAD tools in support of electrical performance analysis and noise-aware design of integrated electronic systems. He was the cofounder of the IEEE Topical Meeting on Electrical Performance of Electronic Packaging in 1991. He is a Fellow of IEEE and is currently serving as Editor of the IEEE Press Series on Electromagnetic Wave Theory, Associate Editor of the IEEE Transactions on Advanced Packaging, and as Distinguished Lecturer for the IEEE Microwave Theory & Techniques Society. In 2005, he received the Alexander von Humboldt Research Award from the Alexander von Humboldt Foundation, Germany, for outstanding contributions to electromagnetic theory. In 2000, he received the University of Illinois, ECE Department Outstanding Faculty Teaching Award.